

XTREME POWER ASSIST STEERING

Engineered to bring the smooth, easy control of electric power-assisted steering to a wide range of popular boats, including pontoons, runabouts, RIBS, aluminum fishing boats and center consoles.

DOMETIC

SMOOTH HANDLING FOR MECHANICAL STEERING

The Xtreme Power Assist Steering is engineered to bring the smooth, easy control of electric power-assisted steering to a wide range of popular boats, including pontoons, runabouts, RIBS, aluminum fishing boats and center consoles. This is an affordable, easy-to-install solution that offers a more enjoyable driving experience.

This system differs vastly from competitive "electric helm" systems on the market, because it does not increase the load on the mechanical steering helm or cable. Once this system is installed, the mechanical steering cable now only turns the power assist unit, while the electric steering actuator actually turns the engine load. This ensures reliable long-term performance in real-world, on-the-water conditions.

Benefits with XPA

- Significantly reduced steering effort provides a car-like driving experience for mechanically steered boats.
- Engineered to fit a wide range of single engine, mechanically steered outboard boats from 90-200HP.
- Integrates with any existing SeaStar rack or rotary cable steering system, so there is no need to install new steering to take advantage of this new technology.
- Designed as a self-contained, plug-and-play system which easily mounts to all major outboard brands and integrates with the boat's existing mechanical steering in less than 30 minutes.
- Built-in Fail-Safe System automatically reverts to mechanical steering in the event of a system failure.

XPA Clearance Requirements

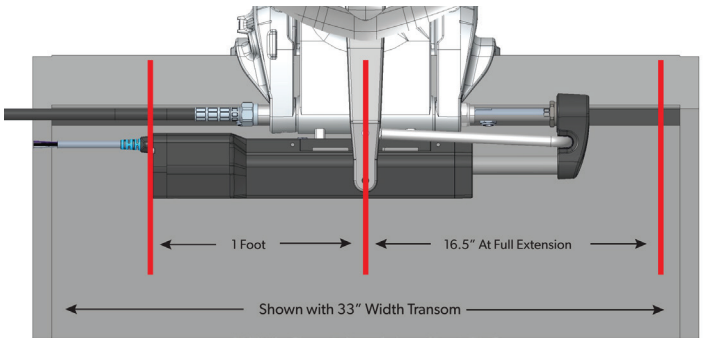

Part No.	Description
XPA1012P	Xtreme Power Assist Steering Unit
XPA1012B	Xtreme Power Assist, Bulk Package of 9
SA27715P	BRP Body Spacer Plate and Mounting Hardware

Size	L 2 ft x W 12 in x H 2.7 in x D 3.25 in
Stroke Length	8.5 inches total travel
Operating Voltage	9-16 VDC
Maximum Push Load	500lbf load up to 3 seconds
Operating Temperature	0 - 170°F
Storage Temperature	-40 - 185°F
Power Consumption under typical load	6 amps typical operating load max 30 amps
Water Ingress Protection	IPX6 & IPX7
Power Connections	Ring terminal battery connections with in line fuse
Regulatory	ABYC P-17

Note: Subject to change



XTREME POWER ASSIST TRANSOM REQUIREMENTS



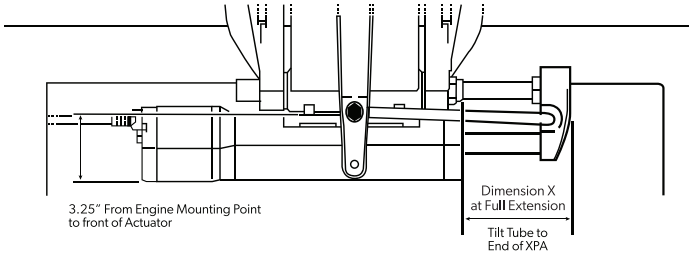

MANUFACTURER	MODEL	DIMENSION "X"
Suzuki	DF70A, DF80A, DF90A	10.2"
	DF100A, DF115A, DF140A	10.2"
	DF150A, DF175A, DF200A	10.2"
Yamaha	F75C, F100B, F115A	10.2"
	F75B, F80B, F90B, F100D	10.2"
	F75F, F90C/D, F100F/G, F115B, F130A	10.2"
	F150A/B, F150C/D/F, F165A, F175A/B, F185A, F200F/G	10.0"
Honda	BF75, BF90, BF100	10.2"
	BF115, BF135, BF150	10.2"
	BF200	10.2"
Mercury	75/90/115 four stroke, 70/90/115 SeaPro, 115 ProXS	10.2"
	135/150 four stroke, 135/150 SeaPro, 150 ProXS	10.6"
	175/200 four stroke, 200 SeaPro, 175 ProXS	10.2"
Evinrude	E75 (DPL, DPX, DSL)	9.6"
	BE90 (DPL, DPX, DSL)	9.6"
	E115 (DBX, DCX, DHL, DPL, DHX, DPX, DSL, HSL)	9.6"
	E130 (DCX, DPL, DPX, DSL)	9.6"
	DE150/E150 (DCX, DPX, DBX, DCX, DHL, DPL, DPX, DSL, HSL)	9.6"
	E175 (DCX, DPL, DPX, DSL)	9.6"
	DE200/E200 (2.6L - CX, PX, DCX, DPX, DSL	9.6"



DOMETIC