POWER & CONTROL

XTREME SERIES CENTER CONSOLE MOUNT CONTROL

The ergonomics and features of our Xtreme controls are advanced beyond those of any other control on the market.

BALANCED
HANDLE

EASY
INSTALLATION & SETUP

DUAL FUNCTION
CONTROL



Mobile living made easy.

DOMETIC

DUAL-FUCTION CONTROL FOR NEARLY ANY ENGINE.

The ergonomics and features of our Xtreme controls are advanced beyond those of any other control on the market.

A shapely, balanced handle design provides an incredibly smooth yet positive feel. Neutral interlock, throttle warm-up, and start-in-gear protection features are standard on all Xtreme Side mount models, with power trim/tilt, emergency cut off switches offered as an option. In addition the cosmetics of these controls can be configured to suit many tastes on center console or Port side mounted boats.

Xtreme center console controls are suitable for use with both 3300/33C universal or OEM type control cables without adaptation at the control.

Features

- All controls include start in gear protection
- Designed for use with both 3300/33C universal and OEM shift and throttle cables
- Suitable for most single engine boats
- Can be used in a dual station boat with the DS Unit
- Can be used on the port side gunwale of the boat or on the right side (starboard) of a center console
- Dual action lever (throttle and shift control on one handle)
- Neutral Interlock standard on all side mount controls
- Trim & Tilt options available
- Optional cut off switch (inboard and outboard versions)
- Drag adjustment on all models
- Easy installation and set up
- Neutral “warm up” button for throttle only operation
- Designed and assembled in the USA

ORDER INFORMATION	
OPTION - BLACK	**PART NO.**
Xtreme Center Console Control, Black with Engine Cut Off Switch	CHX8850P
Xtreme Center Console Control, Black with Engine Cut Off Switch, Trim Switch	CHX8851P
Xtreme Center Console Control, Black with Engine Cut Off Switch, Trim Switch, Tilt Switch	CHX8852P
OPTION - CHROME	**PART NO.**
Xtreme Center Console Control, Chrome with Engine Cut Off Switch, Trim Switch	CHX8350P
Xtreme Center Console Control, Chrome with Engine Cut Off Switch, Trim Switch, Tilt Switch	CHX8351P
Xtreme Center Console Control, Chrome with Engine Cut Off Switch, Trim Switch, Tilt Switch	CHX8352P

DUAL-FUCTION CONTROL FOR NEARLY ANY ENGINE.

Technical Data

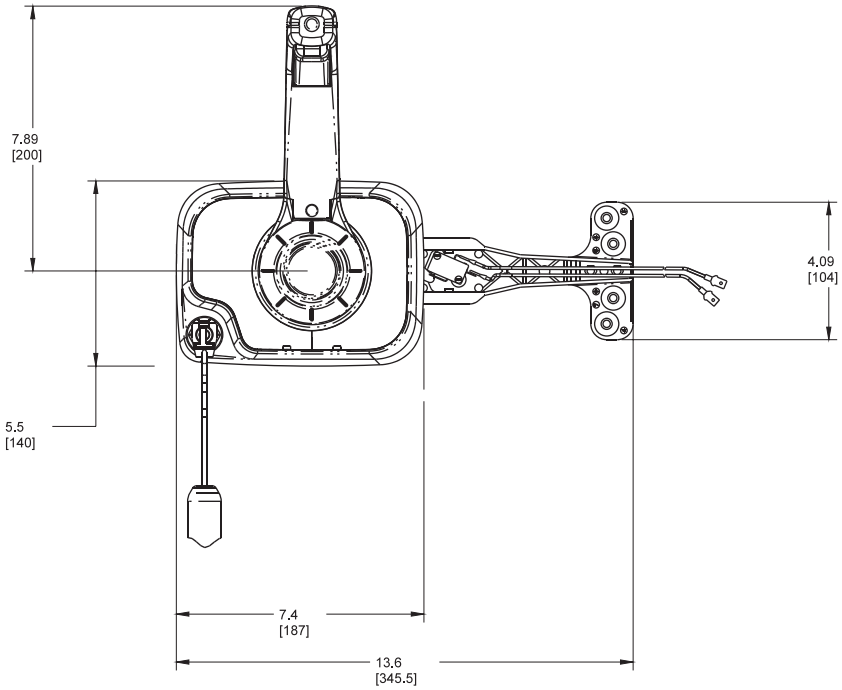

CHX8350P Hole Cutout

