DOMETIC

REFRIGERATION

RU

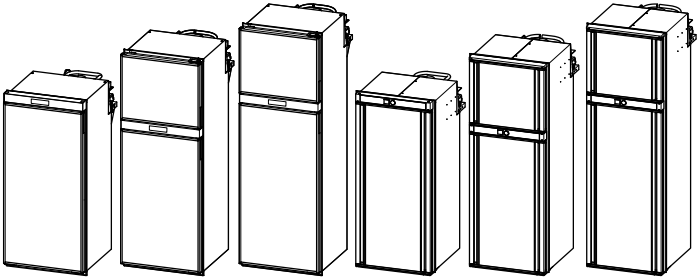

RUC5307X, RUC5308X, RUC6507X, RUC6508X, RUC8507X, RUC8508X

EN **RU Compressor Refrigerators**
Installation and Operating Manual.....3

Copyright

© 2026 Dometic Group. The visual appearance of the contents of this manual is protected by copyright and design law. The underlying technical design and the products contained herein may be protected by design, patent or pending patent. The trademarks mentioned in this manual belong to Dometic Sweden AB. All rights are reserved.

English

1 Important notes....3
2 Explanation of symbols....3
3 Safety instruction....4
4 Explanation of symbols on the device....7
5 Scope of delivery....7
6 Accessories....7
7 Intended use....7
8 Technical description....8
9 Installation....15
10 Operation....35
11 Cleaning and maintenance....45
12 Troubleshooting....47
13 Warranty....51
14 Disposal....51
15 Technical data....51

1 Important notes

Please read these instructions carefully and follow all instructions, guidelines, and warnings included in this product manual in order to ensure that you install, use, and maintain the product properly at all times. These instructions MUST stay with this product.

By using the product, you hereby confirm that you have read all instructions, guidelines, and warnings carefully and that you understand and agree to abide by the terms and conditions as set forth herein. You agree to use this product only for the intended purpose and application and in accordance with the instructions, guidelines, and warnings as set forth in this product manual as well as in accordance with all applicable laws and regulations. A failure to read and follow the instructions and warnings set forth herein may result in an injury to yourself and others, damage to your product or damage to other property in the vicinity. This product manual, including the instructions, guidelines, and warnings, and related documentation, may be subject to changes and updates. For up-to-date product information, please visit documents.dometic.com.

2 Explanation of symbols

A signal word will identify safety messages and property damage messages, and also will indicate the degree or level of hazard seriousness.

WARNING!
> Indicates a hazardous situation that, if not avoided, could result in death or serious injury.

CAUTION!
> Indicates a hazardous situation that, if not avoided, could result in minor or moderate injury.

NOTICE!
> Indicates a situation that, if not avoided, could result in property damage.

NOTE Supplementary information for operating the product.

3 Safety instruction

3.1 General safety

WARNING! Fire hazard

> Ensure clean and residue-free handling if silicon sealant or similar is used. There is a risk of fire if silicone filaments come into contact with hot parts or naked flames.

WARNING! Electrocution hazard

> Installation and removal of the refrigerator may only be carried out by qualified personnel.
> Installation in areas exposed to water must be performed by a qualified technician.
> If installing the refrigerator under a canopy or similar environment, ensure that the refrigerator is protected from rain and splashing water.
> Do not operate the refrigerator if it is visibly damaged.
> This refrigerator may only be repaired by qualified personnel. Improper repairs can result in considerable danger or damage to the refrigerator.
> If the power cable for this refrigerator is damaged, it must be replaced by the manufacturer, customer service or a similarly qualified person in order to prevent safety hazards.
> When positioning the refrigerator, ensure the supply cord is not trapped or damaged.
> Do not locate multiple portable socket-outlets or portable power supplies at the rear of the refrigerator.
> Do not touch exposed cables with your bare hands.
> Plug the device to sockets that ensure proper connection especially when the device needs to be grounded.
> If the device is powered by the mains, ensure that the power supply has a residual current circuit breaker (RCCB) or a ground fault circuit interrupter (GFCI). The installation must be carried out in accordance with all applicable regulations, especially in potentially damp areas.

WARNING! Fire hazard

> The refrigerant in the refrigerant circuit is highly flammable and in the event of a leakage combustible gases could build up if the appliance is in a small room. In the event of any damage to the refrigerant circuit:
  - Keep naked flames and potential ignition sources away from the refrigerator.
  - Ventilate the room well.
  - Switch off the refrigerator.
> The refrigeration circuit contains a small quantity of an environmentally friendly but flammable refrigerant. It does not damage the ozone layer and does not increase the greenhouse effect. Any leaking refrigerant may ignite.
> For refrigerators with flammable refrigerant: Do not use or store the refrigerator in confined spaces with none or minimal air flow.
> Keep the installation recess for the refrigerator free of any electrical components and light sources which during normal or abnormal operation produce sparks or arcs (i.e., relays or fuse boxes).
> The insulation of the refrigerator contains flammable cyclopentane and requires special disposal procedures. Deliver the refrigerator at the end of its life-cycle to an appropriate recycling center.

WARNING! Explosion hazard

> Do not store any explosive substances, such as aerosol cans with propellants, in the refrigerator.

WARNING! Health hazard

> **For the European Union, UK and Turkey:** This device can be used by children aged from 8 years and above and persons with reduced physical, sensory or mental capabilities or lack of

experience and knowledge if they have been given supervision or instruction concerning use of the device in a safe way and understand the hazards involved. **For all other regions:** This device is not intended for use by persons (including children) with reduced physical, sensory or mental capabilities, or lack of experience and knowledge, unless they have been given supervision or instruction concerning use of the device by a person responsible for their safety.

> Children aged from 3 to 8 years are allowed to load and unload the refrigerator.
> Cleaning and user maintenance shall not be made by children without supervision.
> Children must be supervised to ensure that they do not play with the refrigerator.

WARNING! Risk of child entrapment

> Ensure that the shelves are mounted and secured so that children cannot lock themselves in the refrigerator.
> Before disposing of your old refrigerator:
  - Dismantle the drawers.
  - Leave the shelves in the refrigerator so that children cannot climb inside.
> Take off the doors.

CAUTION! Health hazard

> To avoid a hazard due to instability of the refrigerator, it must be fixed in accordance with the installation instructions.
> Keep ventilation openings, on the refrigerator and in its enclosure or in the built-in structure, clear of obstruction.
> Do not use mechanical devices or other means to accelerate the defrosting process, other than those recommended by the manufacturer.
> Do not open or damage the refrigerant circuit under any circumstances.
> Do not use electrical devices inside the refrigerator unless they are recommended by the manufacturer for that purpose.

CAUTION! Risk of injury

> DO NOT USE OR STORE FLAMMABLE MATERIALS IN OR NEAR THIS REFRIGERATOR.
> DO NOT PLACE ARTICLES ON OR AGAINST THIS REFRIGERATOR.
> DO NOT MODIFY THIS REFRIGERATOR.

NOTICE! Damage hazard

> Only select operation with DC power supply if the vehicle engine is running and providing sufficient voltage, or if you are using a battery monitor.
> If present, keep the condensate drain clean at all times.
> If the refrigerator has ventilation grilles, do not use a high-pressure cleaner near the ventilation grille when cleaning the vehicle.
> The refrigerator shall not be exposed to rain.
> Never pull the plug out of the socket by the connection cable.

WARNING! Hazard due to unprofessional maintenance

It is hazardous for anyone other than an Authorized Service Person to service this appliance.

> In Queensland the authorized Service Person MUST hold a Gas Work Authorization for hydrocarbon refrigerants to carry out maintenance or repairs where the gas system is being opened or charged.

3.2 Safety when installing

WARNING! Fire hazard

> Do not install the refrigerator near naked flames or other heat sources (heaters, direct sunlight, gas ovens etc.).
> Do not open the refrigerant circuit under any circumstances.

3.3 Safety when operating

DANGER! Electrocution hazard

> Before starting the refrigerator, ensure that the power supply line and the plug are dry.

CAUTION! Health hazard

> Ensure to put only items in the refrigerator which may be chilled at the selected temperature.
> Clean regularly surfaces that can come in contact with food and accessible drainage systems.
> Store raw meat and fish in suitable containers in the refrigerator, so that it is not in contact with and cannot drip onto other food.
> Opening the door for long periods can cause a significant increase of the temperature in the compartments of the refrigerator. If the refrigerator is left empty for long periods:
- Switch off the refrigerator.
- Defrost the refrigerator.
- Clean and dry the refrigerator.
- Leave the door open to prevent mold developing within the refrigerator. If available, put the refrigerator door and the freezer door into the winter position.

CAUTION! Risk of injury

> Do not put your fingers into the hinge.
> Close and latch the refrigerator door before beginning a journey.
> The cooling system at the back of the refrigerator becomes very hot during operation. If the refrigerator is equipped with ventilation grilles, protect yourself from contact with hot parts when removing the ventilation grilles.
> The device door or the freezer door can completely detach from the device if used incorrectly. Push the doors closed until you hear a clear click at the top and bottom.

NOTICE! Damage hazard

> Do not lean on the open refrigerator door.
> Store heavy objects such as bottles or cans only in the refrigerator door, in the vegetable compartment or on the bottom shelf.
> If the refrigerator has a double-sided door and the door is not locked correctly on the opposite side, push on that side at the top and the bottom until it locks in place.
> **Danger of overheating!** Always ensure sufficient ventilation so that the heat generated during operation can dissipate. Ensure that the refrigerator is sufficiently far away from walls and other objects so that the air can circulate.
> Do not fill the interior with ice or fluid.
> Protect the refrigerator and the cable against heat and moisture.
> Never pull the plug out of the socket by the connection cable.

NOTE Food poisoning

Improper use of the refrigerator can lead to food spoilage, which can cause food poisoning.

> Keep temperature fluctuation as low as possible. Only open the freezer as often and for as long as necessary. Store the food in such a way that the air can still circulate well.

> Ensure to put only items in the refrigerator which may be chilled at the selected temperature.
> Store the different food types in the respective cooling zone.
> If the temperature of the refrigerator can be adjusted: Adjust the temperature to the quantity and type of the food.
> Food can easily absorb or release odor or taste. Always store food covered or in closed containers/bottles.

NOTE

> If the battery management system of your vehicle shuts down the refrigerator to protect the battery, contact your vehicle manufacturer.
> For ambient temperatures of 15°C … 25°C select the average temperature setting.
> If the door is not locked correctly on the opposite side, push on that side at the top and the bottom until it locks in place.

WARNING! Hazard due to unprofessional maintenance

It is hazardous for anyone other than an Authorized Service Person to service this appliance.

> In Queensland the authorized Service Person MUST hold a Gas Work Authorization for hydrocarbon refrigerants to carry out maintenance or repairs where the gas system is being opened or charged.

4 Explanation of symbols on the device

Warning! Risk of fire. Flammable materials.

5 Scope of delivery

Quantity	Description
1	Refrigerator
1	Drain hose
1	Bottom trim piece
1	Sealing strip (fitted underneath during installation)
1	Installation and Operating Manual

6 Accessories

Available as accessories (not included in the scope of delivery):

Description	Ref. No.
LS300 ventilation grille	9620000524
Roof vent kit	9620008608, 9620008609
Internal vent kit	9620018441

Accessories are available from specialist dealers. If you have any questions, please contact the dealer or your service partner directly.

7 Intended use

The refrigerator is intended for:

- Installation in caravans and motor homes

- Cooling and storing food
- Storing pre-frozen food

This refrigerator is **not** intended for commercial, retail or household applications.

The refrigerator is **not** suitable for:

- Storing medications and other medical products
- Storing corrosion substances or substances that contain solvents
- Quickly-freezing food

The frozen compartment is suitable for storing pre-frozen food, storing or making ice cream and making ice cubes.

It is not suitable for freezing previously unfrozen food.

The refrigerator is intended for installation in a piece of cabinetry or an installation niche.

This product is only suitable for the intended purpose and application in accordance with these instructions.

This manual provides information that is necessary for proper installation and/or operation of the product. Poor installation and/or improper operation or maintenance will result in unsatisfactory performance and a possible failure.

The manufacturer accepts no liability for any injury or damage to the product resulting from:

- Incorrect installation, assembly or connection, including excess voltage
- Incorrect maintenance or use of spare parts other than original spare parts provided by the manufacturer
- Alterations to the product without express permission from the manufacturer
- Use for purposes other than those described in this manual

Dometic reserves the right to change product appearance and product specifications.

8 Technical description

8.1 General

The refrigerator is a compressor refrigerator and withstands a short-term inclination of 30 °, e.g., when used on boats.

The thermostatic control ensures that the refrigerator temperature is kept constant and as little power as possible is consumed.

The refrigerator has a cold weather/low temperature control that allows the refrigerator to operate at low ambient temperatures for extended periods of time.

The refrigerator models **RUC5308X**, **RUC6508X**, and **RUC8508X** are suitable for use with a 100 V~ … 240 V~ voltage as well as with a 12 V⎓ / 24 V⎓ voltage.

The refrigerator models**RUC5307X**, **RUC6507X**, and **RUC8507X** run with 48 V⎓ input only.

All materials used in the refrigerator are compatible for use with foodstuffs. The refrigerant circuit is hermetically sealed.

8.2 Components

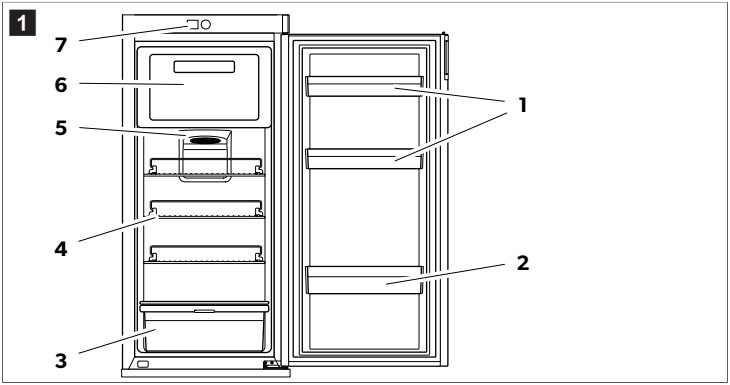

	Description	Quantity
		RUC5307X, RUC 5308X
1	Upper door rack	2
2	Bottom door rack with bottle holder	1
3	Crisper	1
4	Refrigerator shelf	3
5	Interior light	1
6	Freezer compartment	1
7	Control and display elements	1

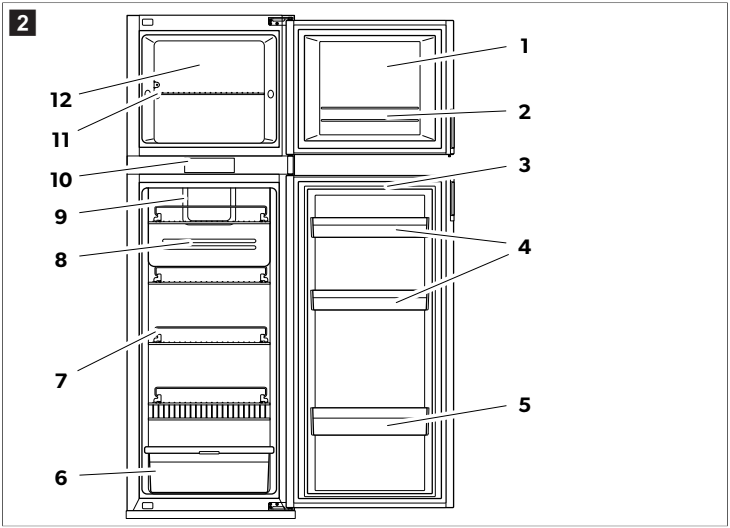

	Description	Quantity	
		RUC6507X, RUC6508X	RUC8507X, RUC8508X
1	Freezer compartment door	1	1
2	Freezer door rack	1	1
3	Refrigerator door	1	1
4	Upper door rack	2	2
5	Bottom door rack with bottle holder	1	1
6	Crisper	1	1
7	Refrigerator shelf	3	4
8	Air duct cover plate	1	1
9	Interior light	1	1
10	Control and display elements	1	1
11	Freezer shelf	1	1
12	Freezer compartment	1	1

8.3 Control and display elements

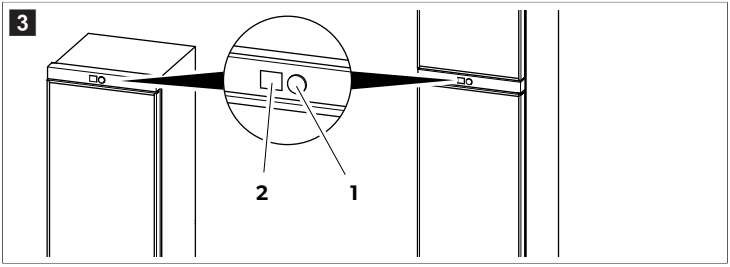

No. in Control and display elements on page 11	Description
1	Control knob
2	Display

Control knob
Function of the control knob:

- Rotate: Choose menu item. The selected menu item is highlighted.
- Short press: Confirm.
- Press for 2 s … 4 s: Reset a fault (see Troubleshooting on page 47).

8.4 Display

NOTE
Turbo mode:

When using the turbo mode, the refrigerator remains in this mode for 12 h or until a temperature of – 2°C is reached and then automatically switches to the performance mode at cooling level 5.

Inner fan:

The inner fan switches off while the refrigerator door is opened and switches on again after the door is closed.

8.4.1 Main menu

By default the display shows the following main menu:

4

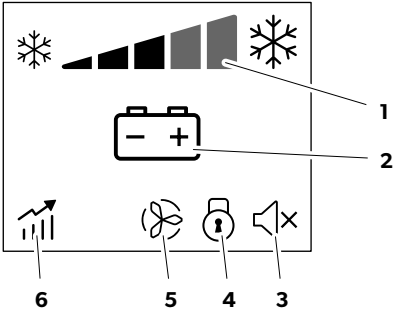

No. in Fig. 4 on page 12	Symbol	Description
1		Cooling capacity indicator (cooling level 1 – 5) Blue snowflake: Compressor is on. White snowflake: Compressor is off.
2		Operation with AC power
		Operation with DC power
3		Beep off: Acoustic indication for extended door openings or fault messages is **deactivated**.
		Beep on: Acoustic indication for extended door openings or fault messages is **activated**.
4		Child lock activated (see Setting the child lock on page 38)
5	1	Speed level of the outer fan: Low speed (1)
	2	High speed (2)

No. in Fig. 4 on page 12	Symbol	Description
6		User mode currently activated: Performance mode (factory default): All functionalities of the refrigerator are activated. The inner fan switches on and off in the same way as the compressor. Cooling level 1 – 5
		Quiet mode: The outer fan operates at low speed. The inner fan switches on and off in the same way as the compressor. The compressor speed is limited. Cooling level 1 – 3
		Eco mode: Operation with reduced energy consumption. The inner fan remains switched on during the compressor switch-off cycles. The defrost function is switched off. Cooling level 3
		Turbo mode: The outer fan and the compressor operate at high speed. The inner fan switches on and off in the same way as the compressor. The defrost function is switched off. Cooling level 5

8.4.2 User modes

	Performance	Quiet	Eco	Turbo
Symbol				
Cooling level	1 – 5	1 – 3	3	5
Compressor speed	Auto	Limited	Auto	High

	Performance	Quiet	Eco	Turbo
Outer fan	Auto	Low	Auto	High
Defrost function	Auto	Auto	Off	Off
Duration	Ongoing	Ongoing	Ongoing	Max. 12 h

8.4.3 Settings menu

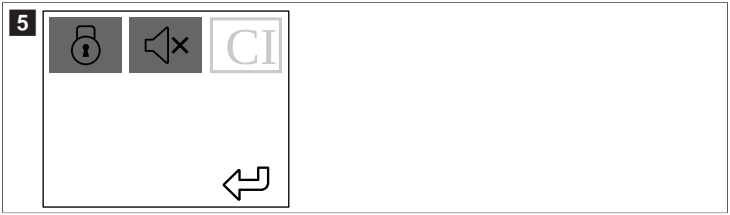

Button	Description
	Child lock
	Beep off
CI	CI-Bus (not applicable)

8.4.4 Standby mode and error screen

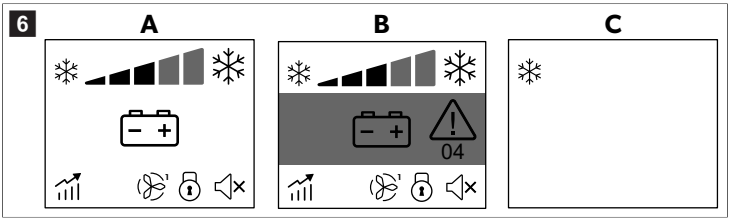

After 10 s without operating the control knob, the backlight dims and the display returns to the main menu (**A**). If activated, the child lock is active (see Setting the child lock on page 38).

After 3 min without operating the control knob, the display switches to standby mode (**C**). A snowflake appears in the upper left corner to indicate that the refrigerator is on, even if the display is in standby mode.

NOTE
If there is an active error display, the display remains active without switching to standby mode. The display changes to the error screen (**B**). In the error screen, the middle section is highlighted in red and shows the corresponding error code (see Troubleshooting on page 47).

9 Installation

> Select one of the following installation variants depending on the installation situation:

- Installation with two rear vents (**Fig. 11** on page 20)
- Installation with one lower rear vent and one roof vent (**Fig. 12** on page 21)
- Installation with internal ventilation (Installation with internal ventilation on page 22)
- Installation with top ventilation (**Fig. 15** on page 24)

The distance between the refrigerator and the back wall has an impact on the cooling performance and power consumption. For optimal cooling performance:

> Ensure that the clearance between the refrigerator and the rear wall is at least 10 mm and not more than 25 mm
> If a clearance of over 25 mm cannot be avoided: Install an air guide, e.g., a ventilation plate, to reduce the air duct to a maximum width of 25 mm.

9.1 Preparation

WARNING! Fire hazard
> Do not locate multiple socket-outlets or portable power supplies at the rear of the refrigerator.

WARNING! Injury hazard
> The length of the DC power supply lead must **not** exceed 15 m

CAUTION! Risk of injury
> The refrigerator has sharp edges. Use gloves during installation.

NOTICE! Damage hazard
> Do not install the refrigerator in the rear of motor homes with the door facing the direction of travel.

NOTE RUC5307X, RUC6507X, and RUC8507X run with 48 V⎓ input only, which should be supplied by a battery, a DC/DC converter, or an AC/DC adapter/converter that is safely isolated from the AC mains.

When installing the refrigerator, consider the following:

> Ensure that the floor is solid and level. Park the vehicle horizontally for this purpose.
> The refrigerator must be installed so that:

- The refrigerator is easily accessible for service work.
- The refrigerator is easy to uninstall and install.
- The refrigerator can be easily removed from the vehicle.

> The refrigerator must be installed in a recess so that it stands secure when the vehicle is in motion.

Depending on the installation, ventilation can be internal or external. Internal ventilation uses a top grille, a bottom grille, and guide rails, which increases the required installation dimensions compared to external ventilation.

> The refrigerator must be installed with a minimum distance of 5 mm for external ventilation and a minimum distance of 13 mm for internal ventilation from the floor to have sufficient space for the bottom grille and to ensure that the door can be opened properly (**Fig. 7** on page 16).

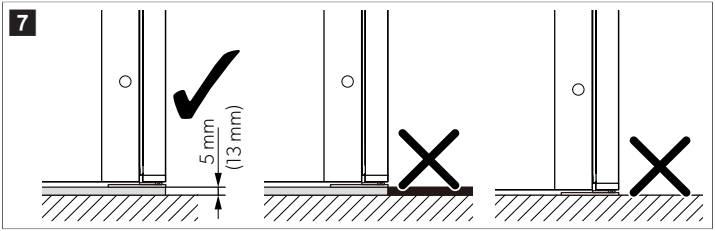

NOTICE! Damage hazard

> Ensure that no carpets interfere with the free movement of the door.
> Avoid placing the refrigerator directly on the floor.

> The refrigerator must not be installed to the side of the air inlet and outlet vents as this leads to poor performance and increases the power consumption of the refrigerator.
> The air inlet and outlet vents must not be covered by vehicle parts during operation (e.g., by an open door or by attached accessories such as bicycle racks).
> Choose an installation location where the refrigerator is protected from drafts, excessive heat, and moisture.

9.1.1 Dimensions of recess and refrigerator (external ventilation)

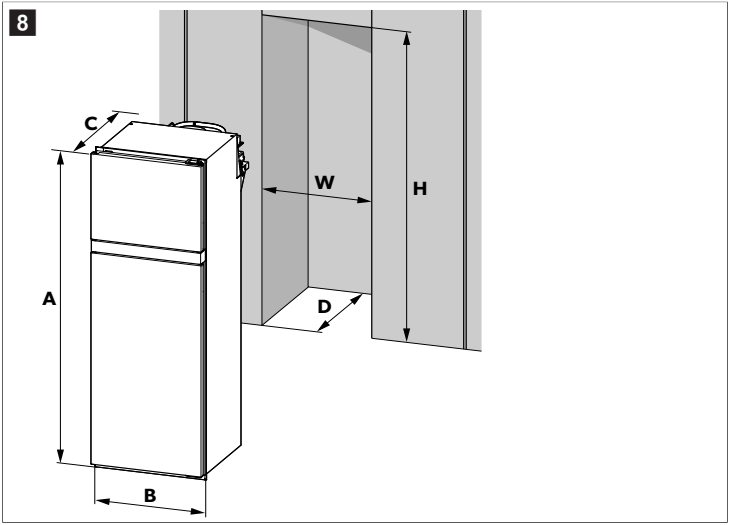

Refrigerator	RUC5307X, RUC5308X	RUC6507X, RUC6508X	RUC8507X, RUC8508X
	Dimension in mm		
Height (**A**)	1195	1451	1661
Width (**B**)	550	550	550
Depth (**C**) (excluding control knob, 5 mm)	667	667	667

Recess			
Height (**H**)	1185 … 1190	1442 … 1447	1652 … 1657
Width (**W**)	530 … 535	530 … 535	530 … 535
Depth (**D**)	Min. 611	Min. 611	Min. 611

9.1.2 Dimensions of recess and refrigerator (internal ventilation)

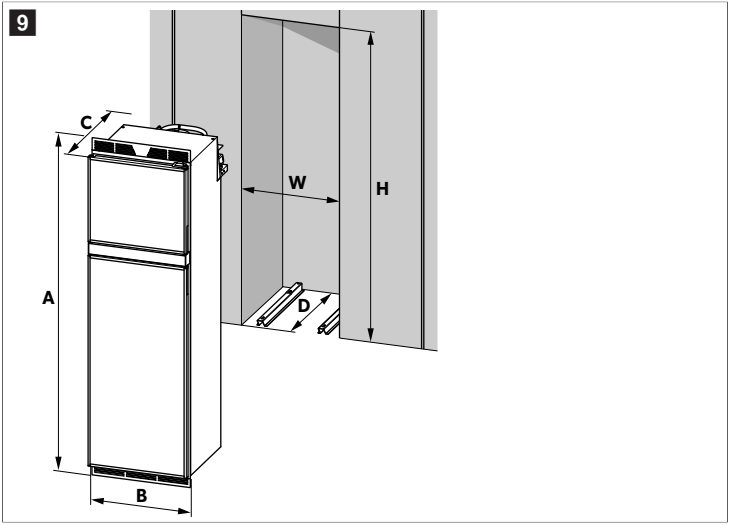

Refrigerator with grille	RUC5307X, RUC5308X	RUC6507X, RUC6508X	RUC8507X, RUC8508X
	Dimension in mm		
Height (**A**)	1296	1554	1763
Width (**B**)	550	550	550
Depth (**C**) (excluding control knob, 5 mm)	667	667	667

Recess			
Height (**H**)	1276 … 1281	1534 … 1539	1744 … 1749
Width (**W**)	530 … 535	530 … 535	530 … 535
Depth (**D**)	Min. 611	Min. 611	Min. 611

9.1.3 Dimensions of recess and refrigerator (top ventilation)

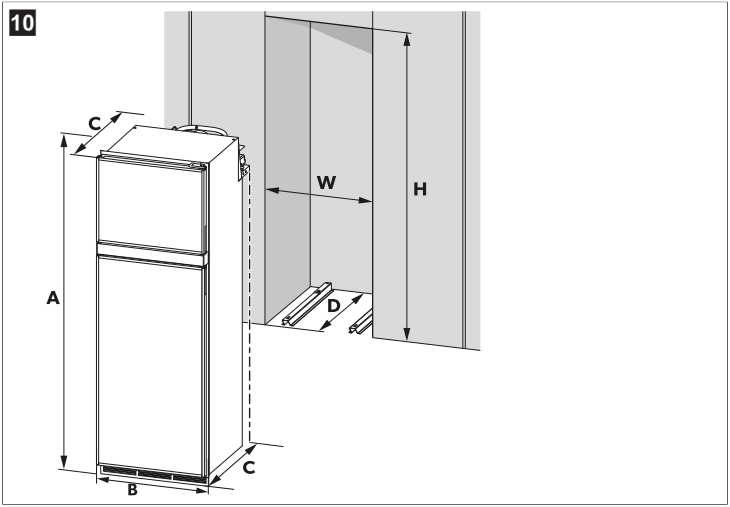

Refrigerator with grille	RUC5308X	RUC6508X	RUC8508X
	Dimension in mm		
Height (**A**)	1235	1491	1700
Width (**B**)	550	550	550
Depth (**C**) (excluding control knob, 5 mm)	667	667	667
Recess			
Height (**H**)	1212 … 1217	1471 … 1476	1680 … 1685
Width (**W**)	530 … 535	530 … 535	530 … 535
Depth (**D**)	Min. 611	Min. 611	Min. 611

9.2 Installation with external ventilation

9.2.1 Installation with two rear vents

Air inlet vents and air outlet vents (**3a** and **3b**) must be installed in the outer wall so that the air can circulate and the heat generated can be dissipated to the outside.

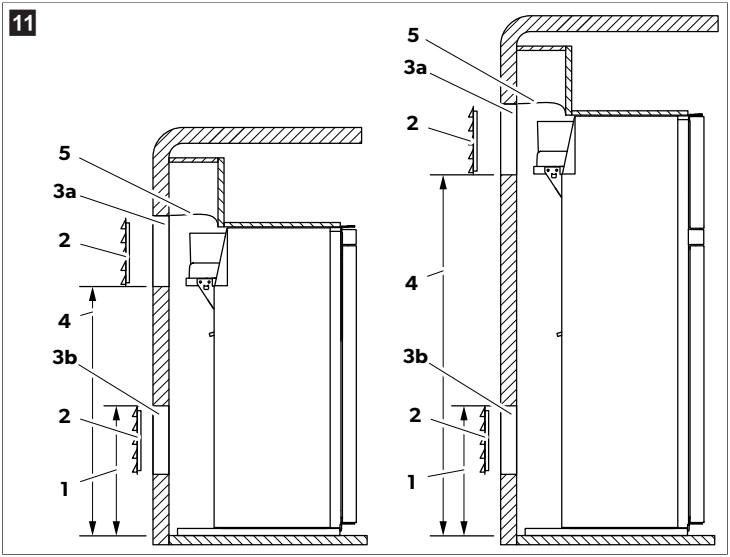

No. in Fig. 11 on page 20	Description
1	Maximum height for the top edge of the ventilation grille (250 mm below the compressor shelf)
2	LS300 ventilation grille (accessories)
3a	Air outlet vent
3b	Air inlet vent
4	Minimum height for the bottom edge of the ventilation grille (equal to the height of the compressor shelf)
5	Air baffle

> Install an air baffle (**5** in Fig. 11 on page 20) above the compressor unit to prevent the heat from accumulating in the vehicle.

> Make cutouts in the wall for the air inlet and outlet vents. Observe the required dimensions specified in the installation manual for the LS ventilation grille.

- **Position of the air inlet vent**: It must be possible to install the ventilation grille so that the lower edge of the ventilation grille is at least 250 mm from the compressor shelf (**1** in **Fig. 11** on page 20).
- **Position of the air outlet vent (rear venting)**: It must be possible to install the ventilation grille so that the bottom edge of the ventilation grille is not below the compressor shelf.

NOTE
Ensure that the bottom edge of the ventilation grille is as close as possible to the compressor shelf for optimum service access.

9.2.2 Installation with one lower rear vent and one roof vent

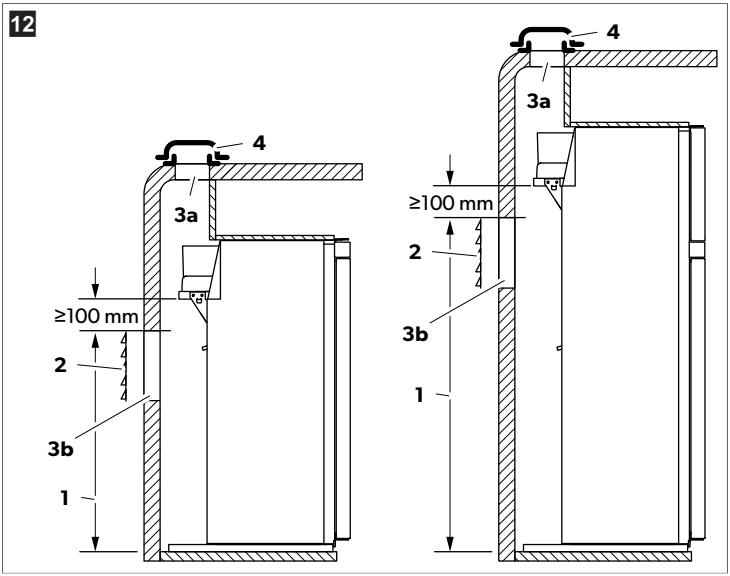

No. in Fig. 12 on page 21	Description
1	Maximum height for the top edge of the ventilation grille (equal to 100 mm below the compressor shelf)
2	LS300 ventilation grille (accessories
3a	Air outlet vent
3b	Air inlet vent

No. in Fig. 12 on page 21	Description
4	Roof vent (accessories)

> Make cutouts in the wall for the air inlet and outlet vents. Observe the required dimensions specified in the installation manual for the LS ventilation grille and the roof vent kit.

- **Position of the air inlet vent**: It must be possible to install the ventilation grille so that the upper edge of the ventilation grille is at least 100 mm from the compressor shelf (**1** in **Fig. 12** on page 21).
- **Position of the air outlet vent (roof venting)**: The air outlet vent must be located directly above the cooling unit at the rear of the refrigerator.

NOTE: If the air outlet vent **cannot** be installed directly, but only offset above the back of the refrigerator, install an air duct to prevent the heat from accumulating.

9.3 Installation with internal ventilation

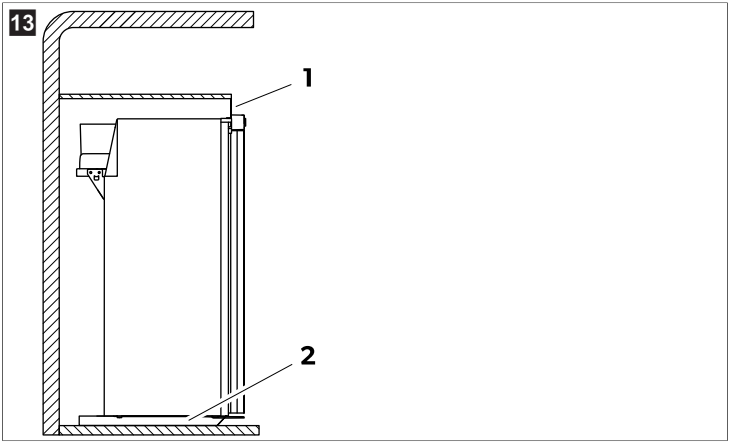

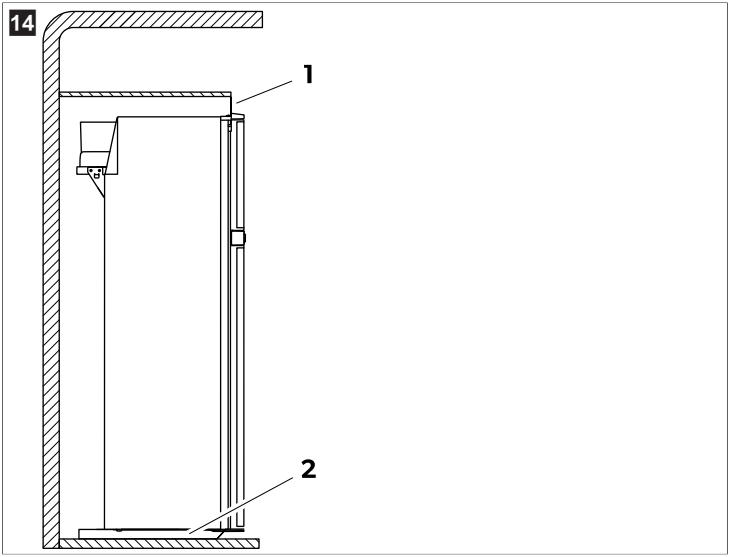

No.	Description
1	Top grille (accessories)
2	Bottom grille, guide rails (SKU 9620018441) (accessories)

1. Mount the guide rails onto the floor in the installation recess (see Mounting the guide rails on page 29).
2. Install the refrigerator and ensure that it is protected from excessive heat, otherwise it leads to poor performance and high power consumption of the refrigerator.
3. Mount the bottom grille using the sealing strip (see Mounting the bottom grille on page 31).
4. Mount the top grille onto the top of the refrigerator (see Mounting the top grille on page 28).

9.4 Installation with top ventilation

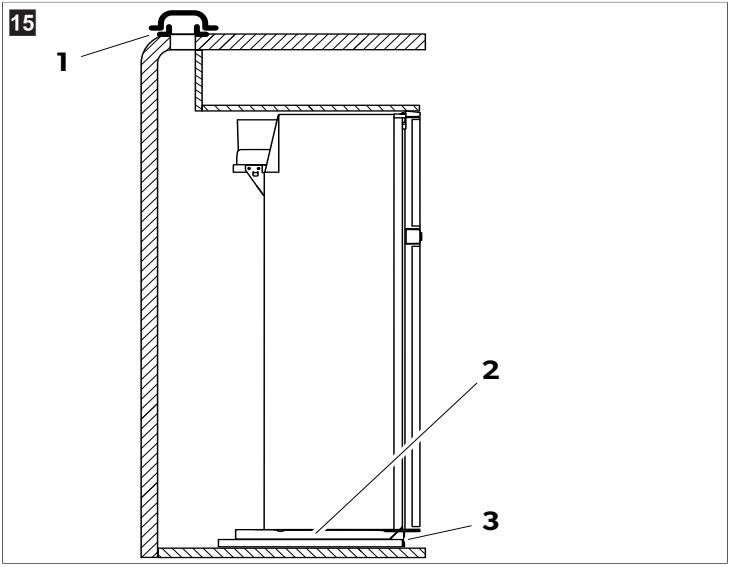

No. in Fig. 15 on page 24	Description
1	Roof vent (accessories)
2	Guide rails (accessories)
3	Bottom grille (accessories)

1. Mount the guide rails to the floor (see Mounting the guide rails on page 29).
2. Install the refrigerator and ensure that it is protected from excessive heat, otherwise it leads to poor performance and high power consumption of the refrigerator.
3. Mount the bottom grille (see Mounting the bottom grille on page 31).
4. Install a roof vent (see Installation with one lower rear vent and one roof vent on page 21).

9.5 Installing the ventilation grille

NOTE
Use the LS300 ventilation grille (accessories).

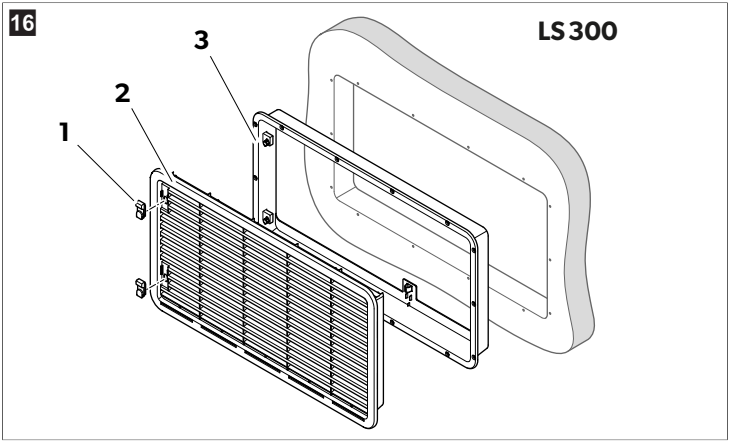

No. Fig. 16 on page 25	Description
1	Slider
2	Ventilation grille
3	Installation frame

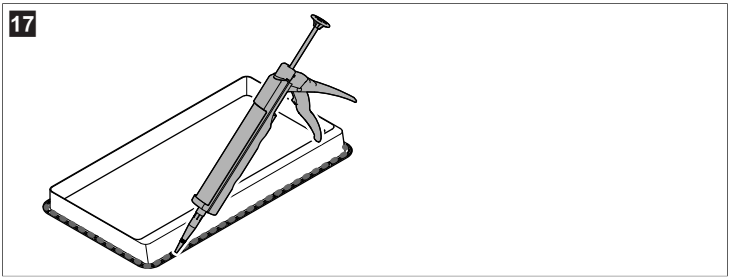

1. Apply sealant to the inner edge of the installation frame to ensure the installation is water resistant (Fig. 17 on page 25).

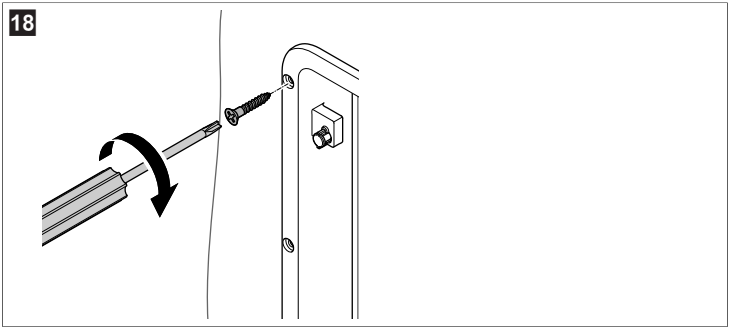

2. Insert the installation frame into the prepared openings in the outer wall and screw the installation frame to the mounting holes (**Fig. 18** on page 26).

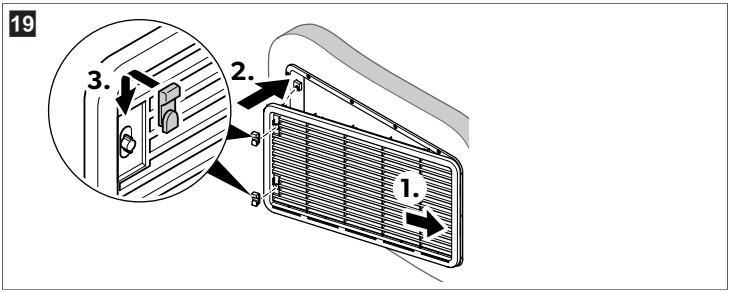

3. Insert the grille (**1** and **2** in **Fig. 19** on page 26).
4. Insert the slider to lock the grille in place (**3** in **Fig. 19** on page 26).

9.6 Installing the roof vent

NOTE
Use the roof vent kit (accessories).

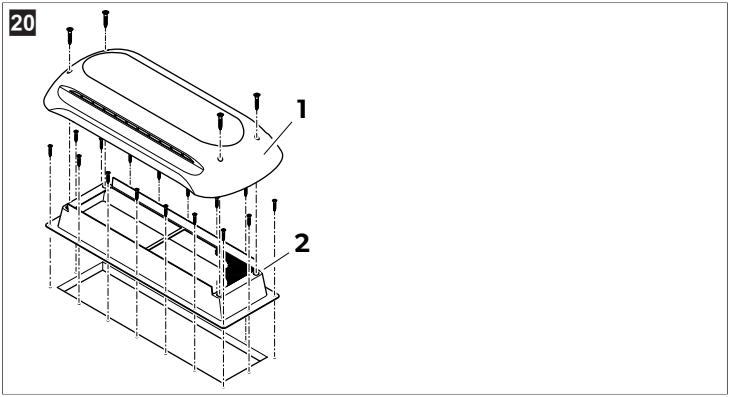

No. in Fig. 20 on page 27	Description
1	Hood
2	Installation frame

1. Apply sealant to the inner edge of the installation frame to ensure the installation is water resistant.

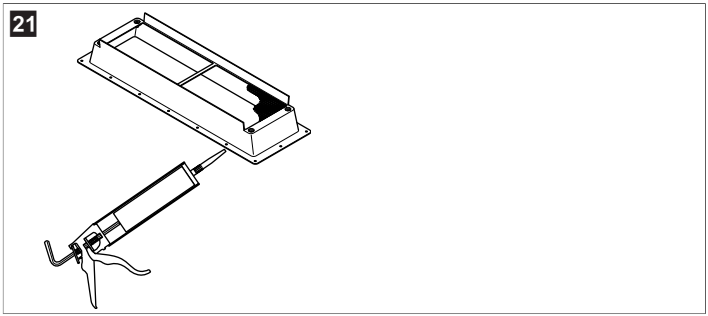

2. Insert the installation frame into the prepared opening in the outer roof (see Installation with one lower rear vent and one roof vent on page 21) and screw the installation frame to the mounting holes (**1** in **Fig. 22** on page 28).

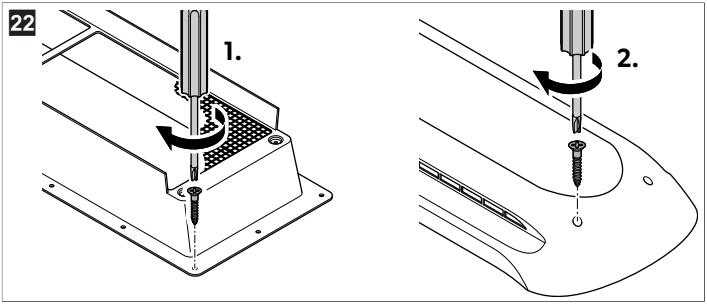

3. Insert the hood and screw it tight (**2** in **Fig. 22** on page 28).

9.7 Mounting the top grille

NOTE Use the internal ventilation kit (accessories).

> Mount the top grille to the refrigerator.

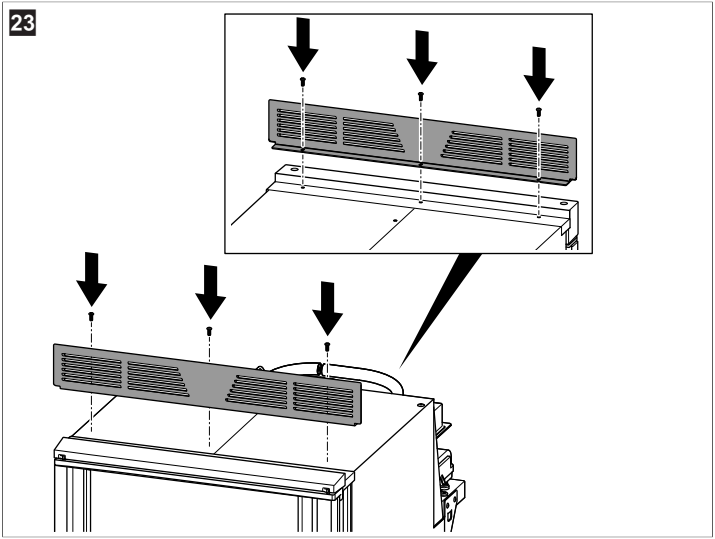

9.8 Mounting the guide rails

NOTE Use the internal ventilation kit (accessories).

> Mount the guide rails to the floor.

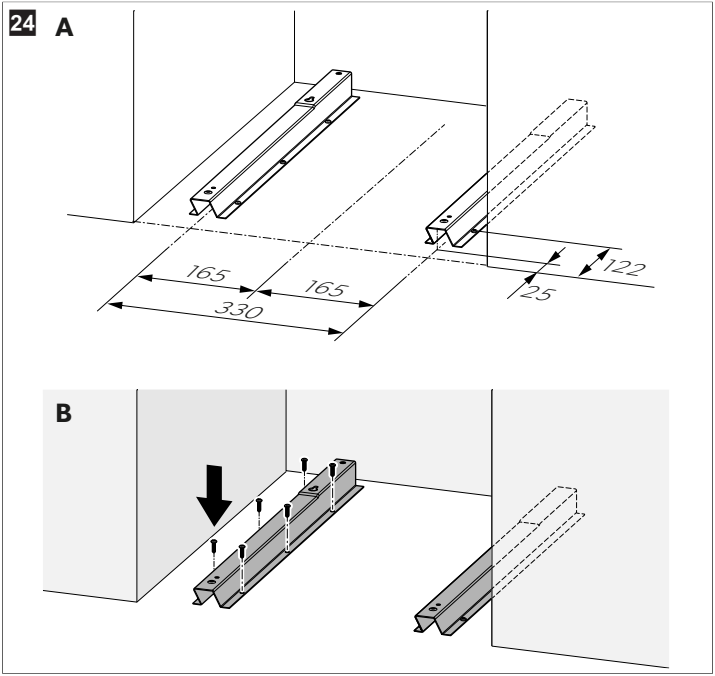

9.9 Mounting the bottom grille

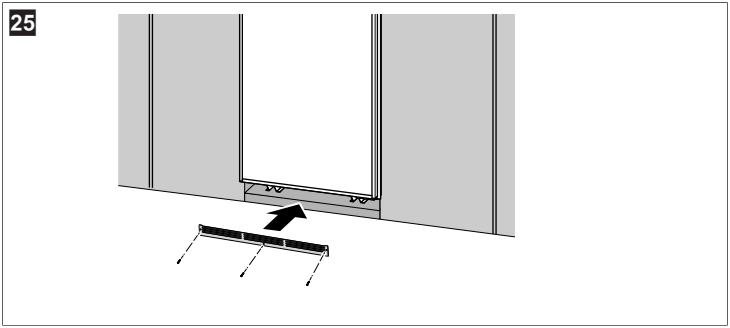

> Push the bottom grille onto the edge of the ground plate, and secure the grille with screws.

9.10 Installing the drain water hose

NOTICE! Damage hazard

> Position the opening for the drain hose so that the drain hose does not touch the boiler housing to avoid damage to the drain hose.
> Avoid kinking of the drain water hose.

1. Drill a hole through the floor at the rear of the refrigerator (⌀ 18 mm).
2. Route the drain water hose through the drilled hole and align the hose so that it can direct the water out of the vehicle.
3. Seal the drilling hole around the drain water hose.
4. Remove the tape from the end of the hose and place the insect grille onto it.

9.11 Sealing the refrigerator

Refrigerators in caravans or motor homes must be installed in an enclosed space so that dust and heat cannot enter the living space directly.

For this purpose, a suitable seal must be installed between the rear wall of the refrigerator and the interior of the vehicle in order to seal the interior of the vehicle from the cooling unit and ventilation area of the refrigerator.

WARNING! Fire hazard

> Do not use flammable materials for the draught-proof installation.

9.11.1 Sealing the refrigerator using the sealing strip

The manufacturer has applied a sealing strip to the rear surface of the front frame.

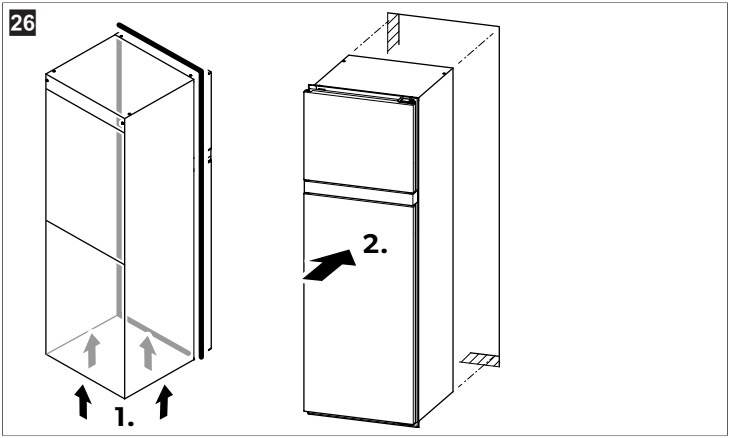

NOTE
When using the internal vent kit (accessories), do not apply the sealing strip to the bottom surface of the refrigerator.

1. Apply the sealing strip to all four sides of the bottom surface of the refrigerator (**1** in **Fig. 26** on page 32).
2. Push the refrigerator into position (**2** in **Fig. 26** on page 32).

✓ The space behind the refrigerator is sealed to the interior of the vehicle.

9.12 Securing the refrigerator

CAUTION! Electrocution hazard and damage hazard

> Only screw through the holes provided on the refrigerator for fastening to prevent injury from damaged electrical cables or damage to foamed components.

> Ensure to tighten the screws firmly so that they do not loosen under increased load (e.g., while driving).

1. Slide the refrigerator into its final place.
2. Align the refrigerator so that
   - The front flange is flush with the front edge of the recess.
   - The refrigerator is standing level.
3. Insert the screws (**1** in **Fig. 27** on page 33) through the plastic bushings on the sides of the refrigerator and screw the refrigerator into the recess.
4. Fit the caps (**2** in **Fig. 27** on page 33) onto the bushings.

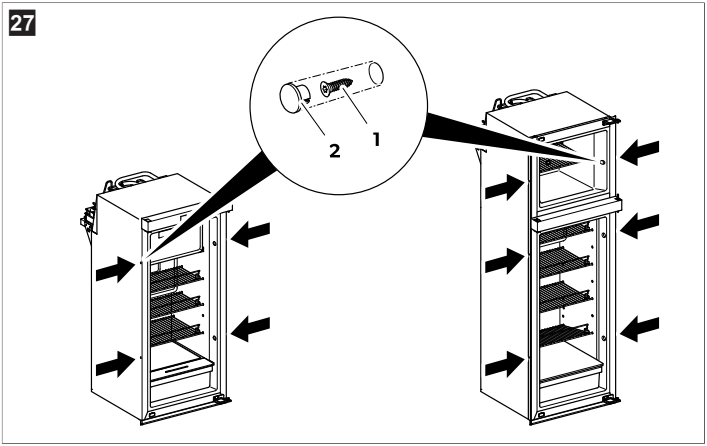

9.13 Connecting the refrigerator

NOTICE! Damage hazard

> Lay the connection cables so that they do not come into contact with hot parts of the device or with sharp edges.

9.13.1 Connecting the refrigerator to DC power supply

The electrical power supply must be connected by a qualified electrician who has demonstrated skill and knowledge related to the construction and operation of electrical equipment and installations and has received safety training to identify and avoid the hazards involved.

NOTE

- For detailed information about refrigerator that run with 48 V⎓ input only, see Technical data on page 51.
- Please use the 24 V cable as a reference when considering the cross section and length requirements for the 48 V cable.

WARNING! Electrocution hazard

> Observe the recommended cable cross-sections, cable lengths and fuses.

CAUTION! Fire hazard

> Place the fuse near the house battery to protect the cable from short circuits and possible burning.

DANGER! Damage hazard

> Do not reverse the polarity.

> To avoid voltage drops and power losses, keep the connection cable uninterrupted and as short as possible. Do not install additional switches, plugs or socket strips.

- Determine the required cross section of the cable in relation to the cable length.

Size		Max. Length	Max. Length
AWG	**Cross section**	**(12 V⎓)**	**(24 V⎓)**
13	2.5 mm²	2.5 m	5 m
12	4 mm²	4 m	8 m
10	6 mm²	6 m	12 m
8	10 mm²	10 m	20 m

- Connect the supply cable to the refrigerator DC terminal block (**1** in **Fig. 28** on page 34).

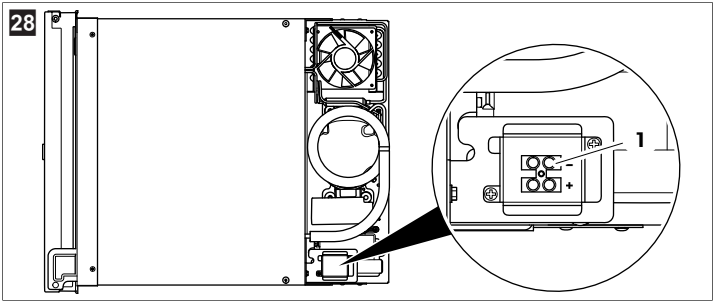

- Connect the refrigerator with fuse protection fitted to the positive (+) side of the supply cable of 15 A (at 12 V) or 7.5 A (at 24 V), with fuse fitted at the battery end of the cable.

NOTE For the refrigerator with 48 V⎓ input, the supply cable must be rated for a minimum current of 5 A and a minimum voltage withstand of 63 V.

9.13.2 Connecting the refrigerator to AC power supply

DANGER! Electrocution hazard

> Never handle plugs and switches with wet hands or when standing on a wet surface.

> If the refrigerator is operated on a boat with an AC mains connection via a shore connection, a residual current circuit breaker must be installed between the AC mains and the refrigerator. Seek advice from a qualified technician.

> The refrigerator must be controlled by a two-pole switch that is suitable for the intended purpose. Ensure that the two-pole switch is installed and marked in such a way that it is easily recognizable for use.

> Connect the refrigerator with the mains plug to an AC socket.

10 Operation

10.1 Before first use

> Before starting your new refrigerator for the first time, clean it inside and outside with a damp cloth for hygienic reasons.
> When using the refrigerator for the first time, there may be a mild odor which will disappear after a few hours. Air out the living space well.
> Do not store goods in the refrigerator for the first 4 h after start-up.
> Protect the interior of the vehicle from warming up excessively (e.g. sunshades in the windows, air conditioner).
> Protect the refrigerator from direct sunlight (e.g. sunshades in the windows).

10.2 Storing food

CAUTION! Health hazard

> If the refrigerator is exposed to an ambient temperature below 10°C for an extended period of time, regulation of the frozen compartment temperature can no longer be guaranteed. That may cause the temperature of the frozen compartment to increase and the stored goods to be defrosted.

NOTICE! Damage hazard

> Observe the maximum load per door rack and door when filling the refrigerator (see Technical data on page 51).
> Do not keep carbonated drinks in the frozen compartment.

> Store food as shown in **Fig. 29** on page 36.

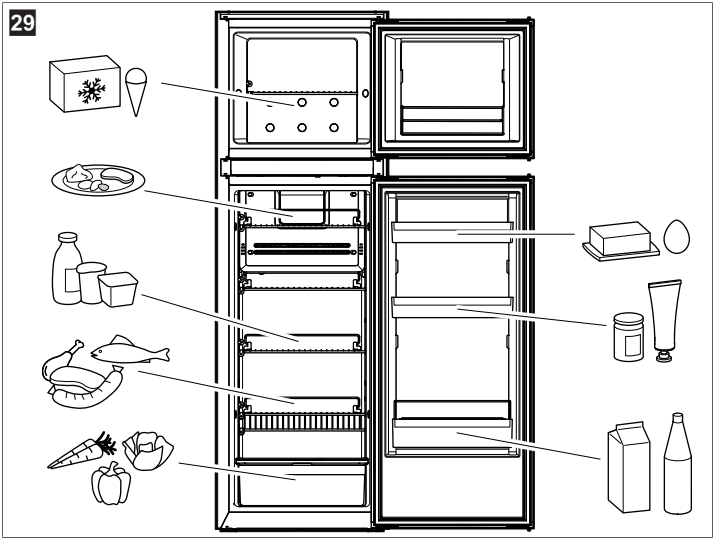

10.3 Saving energy

- Only open the refrigerator as often and for as long as necessary.
- Allow warm food to cool down first before placing it in the device to keep cool.
- Defrost your refrigerator as soon as a layer of ice forms.
- Avoid unnecessarily low temperature settings.
- For optimal energy consumption, position the shelves and drawers according to their position on delivery.
- On a regular basis, ensure the door seal still fits properly.
- Clean dust and dirt from the condenser at regular intervals.

10.4 Tips for optimal refrigerator operation

> Protect the interior of the vehicle from warming up excessively (e.g., sunshades in the windows, air conditioner).

> Protect the refrigerator from direct sunlight (e.g., sunshades in the windows).

10.5 Switching on/off the refrigerator

Switching on the refrigerator

> Press and hold the control knob for at least 3 s.

✓ The refrigerator starts with the last selected power source.

Switching off the refrigerator

> Press and hold the control knob for at least 3 s.

✓ The refrigerator switches off.

10.6 Operating the refrigerator

Menu navigation:

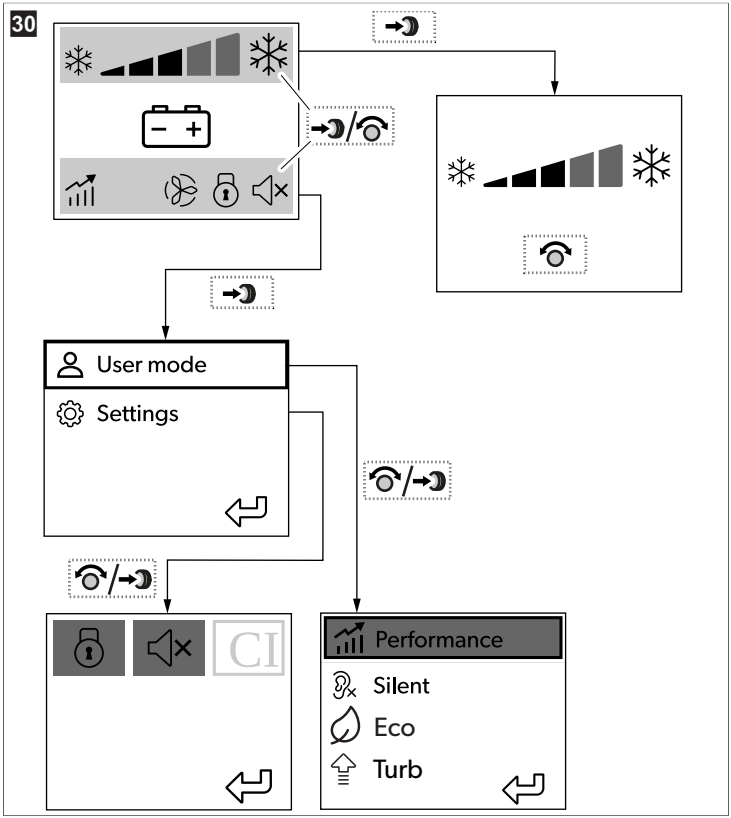

1. Press the control knob to activate the display.

The main menu is divided into two submenus as follows:

Main menu	Submenu
	Cooling capacity
	Settings

2. Rotate the control knob to select a submenu.
3. Press the control knob to open the selected submenu.
   ✓ The submenu opens.
4. Rotate the control knob to navigate through the submenu items or to adjust a setting.
5. Press the control knob to select a submenu item and confirm a setting.
6. Press ⏎ to return to the main menu.

10.7 Setting the cooling capacity

NOTE For ambient temperatures of 15°C … 25°C, select the average cooling capacity.

1. Select the "Cooling capacity" submenu ( ).
2. Rotate the control knob to set the desired cooling level.

10.8 Setting the child lock

The child lock can be activated to prevent children from using the controls.

1. Select the "Settings" submenu ( ) and open "Settings".
2. Push the button to activate or deactivate the child lock.
   ✓ • The symbol is shown on the main menu.
   • After 10 s without operating the control knob, the backlight dims and the child lock is active.

Operating the display with the child lock activated

The child lock can be temporarily deactivated to operate the display. The child lock is automatically reactivated as soon as the display dims (no operation of the control knob within 10 s).

> Press the control button 3 times within 1.5 s to deactivate the child lock temporarily.

10.9 Using the refrigerator door/freezer compartment door

CAUTION! Risk of injury

> Ensure that the refrigerator door and the freezer compartment door are locked before setting off on a journey.
> Always open the doors carefully, as the foodstuff may have slipped and could fall out.

NOTICE! Damage hazard

> Do not open the refrigerator door and freezer compartment door further than a 90 ° angle to avoid damaging the doors.

NOTE The refrigerator door and freezer compartment door can be opened from both sides. After each use, ensure that the doors are closed and you hear a click. The doors will not open on one side until the other side is firmly closed.

10.9.1 Opening the refrigerator door/freezer compartment door

> Press the handle and pull the door open.

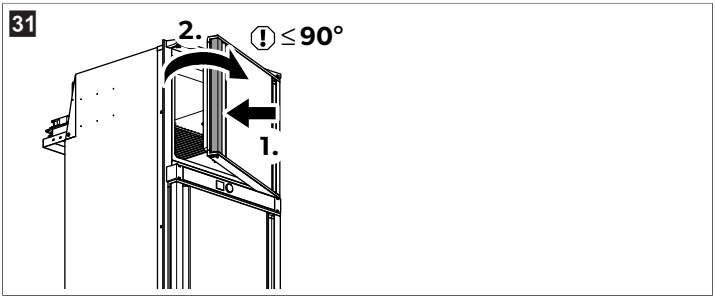

10.9.2 Locking the refrigerator door/freezer compartment door

1. Ensure the door is **not** in the winter position (see Positioning the refrigerator door/freezer compartment door into winter position on page 39).
2. Press the door shut until it clearly audibly clicks into place.

✓ The door is now closed and secured.

10.9.3 Positioning the refrigerator door/freezer compartment door into winter position

CAUTION! Risk of injury

> The winter position may **not** be used while driving.

Put the refrigerator door and the freezer compartment door into the winter position if the refrigerator will not be used for an extended period of time. This prevents mold.

1. Defrost the refrigerator (see Defrosting the refrigerator on page 46).
2. Turn the hook near the securing mechanism all the way at the top and bottom of one side of the door (**1.** in **Fig. 32** on page 40).

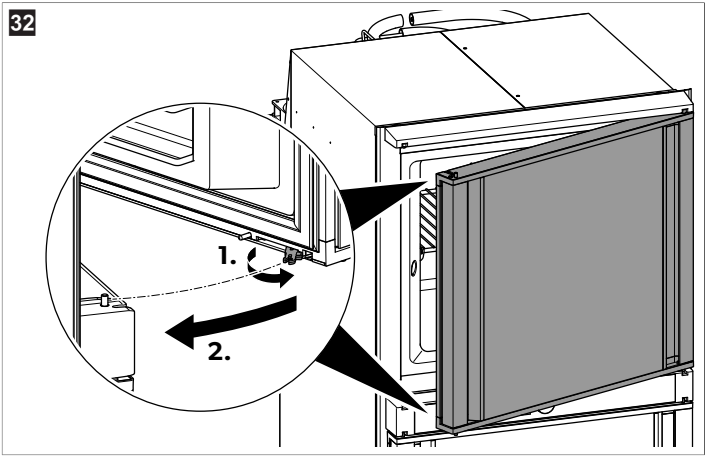

3. Press against the refrigerator door(**2.** in **Fig.** 32 on page 40)
✓ The protruding pin snaps into the hook. The door is locked in position.

10.10 Using the crisper

NOTICE! Damage hazard

> Do not overload the crisper. The maximum load capacity of the crisper is 18 L.

> Use the slider in the crisper to regulate the humidity in the vegetable compartment.

Goods to be cooled		Optimal humidity		Slider position
Vegetables		High	◊◊◊	Closed
Fruit		Low	◊	Open

10.11 Removing and refitting the shelves

WARNING! Risk of child entrapment

> All shelves are fixed in place to prevent children from climbing inside the refrigerator.
> Only remove the shelves for cleaning purposes.
> Refit the shelves and secure them in place.

10.11.1 Removing the shelves

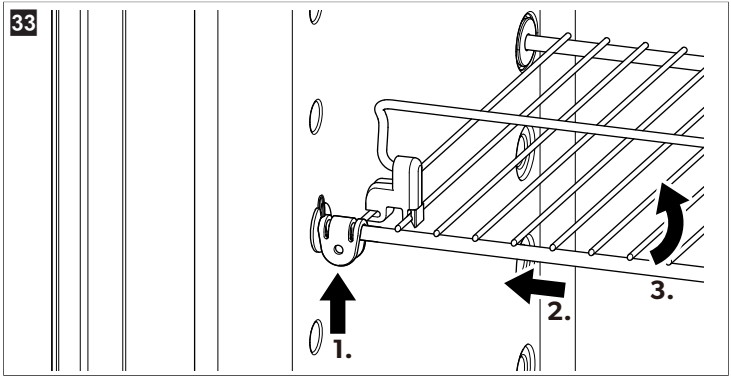

1. Push the locking clamps upwards and remove them.
2. Slide the shelf to the left until the plastic holders on the right side are free.
3. Tilt the right end of the shelf up until the plastic holders on the left side are free.
4. Pull the shelf out frontwards.

10.11.2 Refitting the shelves

1. Tilt the right end of the shelf up to slide the shelf back into the refrigerator compartment.
2. Position the plastic holders on the left side in the suspension (**1.** in **Fig. 34** on page 42).

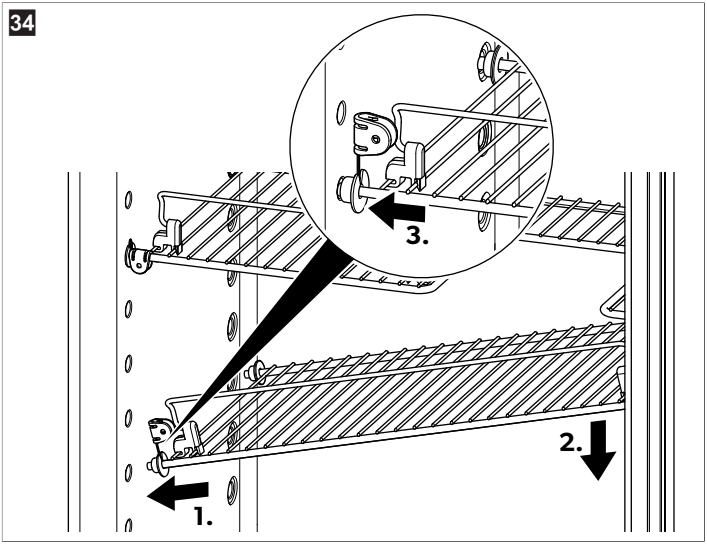

3. Tilt the right end of the shelf down to align it level and slide the plastic holders on the right side into the suspension. (**2.** in **Fig. 34** on page 42).
4. Ensure that the plastic holders are firmly seated in the suspensions (**3.** in **Fig. 34** on page 42).
5. Reattach the locking clamps.

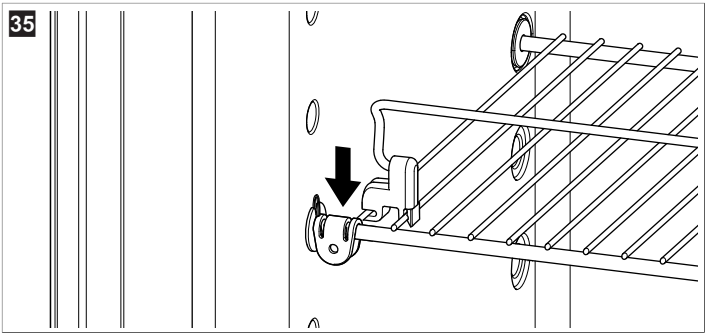

10.11.3 Positioning the bottle shelf

The shelves can be optionally installed in a backward or forward sloping position as a bottle rack.

> Remove the respective shelf and relocate the shelf as shown:

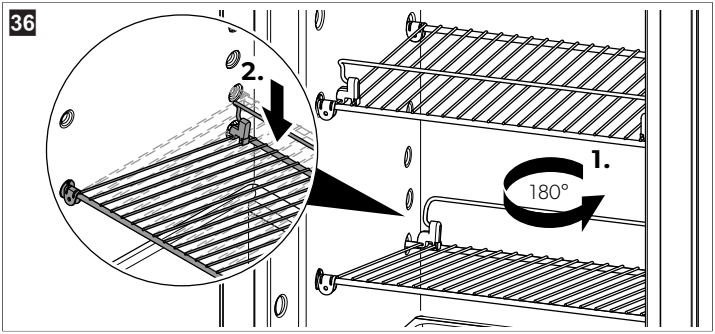

10.12 Replacing the door panel

Removing the door panel

> Pull out the decorative strips on the sides of the door.

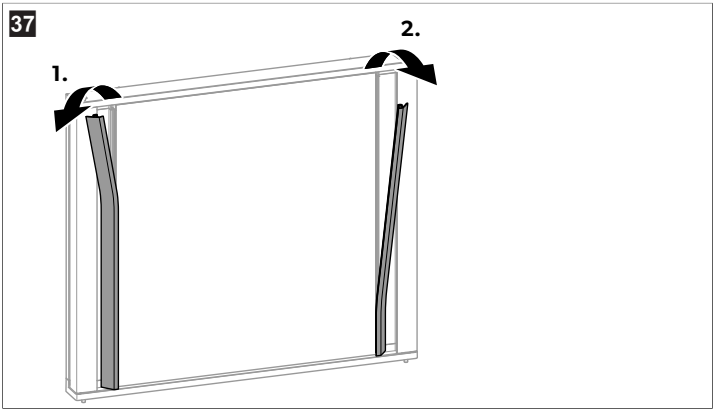

> Remove the door panel.

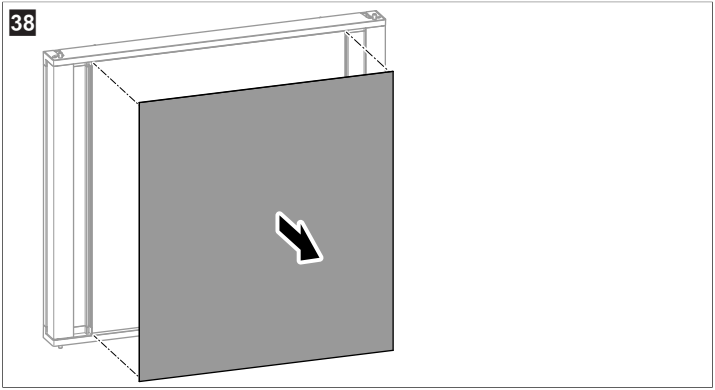

Installing the door panel

1. Place the door panel on the door.

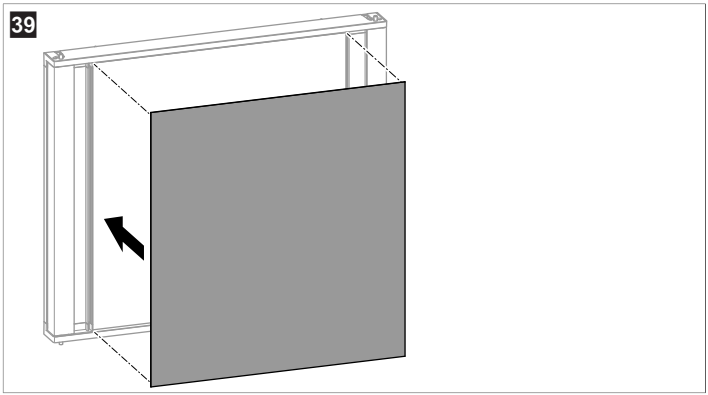

2. Secure the door panel by attaching the decorative strips to the sides of the door.

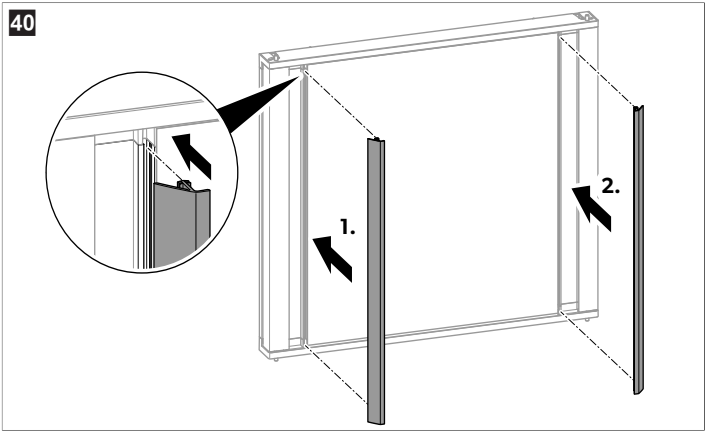

11 Cleaning and maintenance

WARNING! Fire hazard

> Only a qualified person must do the repair, maintenance or recharging of the appliance.
> This appliance refrigerant circuit contains flammable refrigerant.
> Improper repairs or maintenance can lead to considerable hazards.
> Note that self-repair or nonprofessional repair can have safety consequences and might void the guarantee.

WARNING! Electrocution hazard

> Always disconnect the refrigerator from the main power supply before you clean and service it.

NOTICE! Damage hazard

> Do **NOT** use abrasive cleaning agents, hard objects, or any chemical agents such as HC Cleaner or EtOH to clean the fridge.
> Never use hard or sharp tools to remove ice or to free objects frozen onto the device.
> Do not use any mechanical tools or any other tools to speed up the defrosting process.

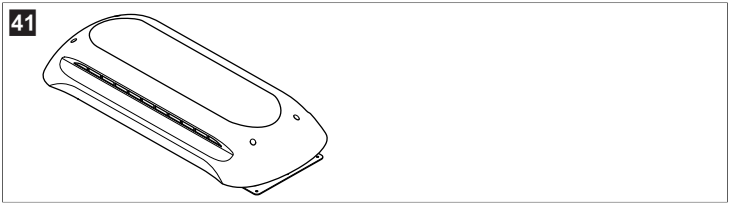

> Clean the refrigerator regularly and as soon as it becomes dirty with a damp cloth.
> Ensure that no water drips into the seals. This can damage the electronics.
> Wipe the refrigerator dry with a cloth after cleaning.
> Check the condensate drain regularly.

Clean the condensate drain when necessary. If it is blocked, the condensate collects on the bottom of the refrigerator.

11.1 Defrosting the refrigerator

The refrigerator compartment has an automatic cyclic defrost system that prevents excessive frost formation on the evaporator fins.

- If the refrigerator is used for a long time in high humidity and/or high ambient temperatures, frost may still form on the evaporator fins and the refrigerator must be defrosted manually.
- The freezer compartment must be defrosted at regular intervals. Defrost the freezer compartment once the frost layer is higher than 3 mm.

NOTICE! Damage hazard

> Do not use mechanical tools or a hair dryer to remove ice or to loosen frozen items.

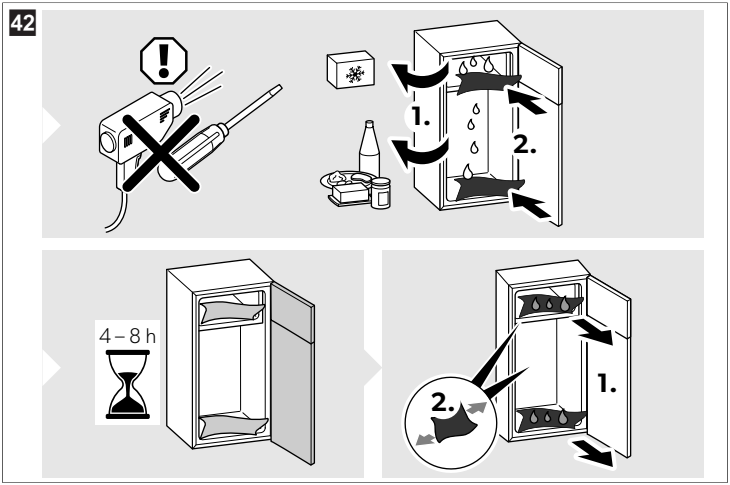

1. Disconnect the power supply.
2. Remove the contents from the freezer and refrigerator compartments.
3. Put a cloth in the freezer and refrigerator compartment to absorb any excess water.
4. Leave the doors open for at least 4 h.
   ✓ The condensate drains off through a hose at the back of the refrigerator and is discharged to the outside of the vehicle.
5. Wipe the freezer and refrigerator compartment dry with a cloth.

12 Troubleshooting

Problem	Possible cause	Suggested remedy
Poor cooling performance. The refrigerator does not reach the set cooling temperature or exceeds the set cooling temperature.	The ventilation around the cooling unit is not sufficient.	> Check that no ventilation grille or roof vent is obstructed. > Check that the required clearances for the air inlet vent and air outlet vent have been maintained during installation.
	The door seals are damaged or have slipped.	> Check the door seals for damage and correct fit.
	The fan is defective.	> Replace the fan.
	The control sensor is defective.	> Contact an authorized service agent.

Problem	Possible cause	Suggested remedy
	The temperature at the compressor is too low (< 0°C).	> Close/Cover all external ventilation grilles completely with insulation material.
	The evaporator is iced up.	> Check whether the refrigerator door is closes properly and the seals are not damaged. > Defrost the refrigerator.
	The condenser is dirty.	> Clean the condenser.
	The ambient temperature is too high.	> Temporarily remove the ventilation grille to allow the warm air to escape more quickly. > Ensure a lower ambient temperature.
	Too much foodstuff was placed in the refrigerator at once.	> Reduce the contents of the refrigerator.
	Too many hot foods were placed in the refrigerator at once.	> Remove the warm food and leave it to cool down before putting it in again.
	The refrigerator has not been in operation for very long.	> Check the temperature again after 4 h … 5 h.
Water leaks into the inside of the refrigerator.	The water drainage system is blocked by foodstuff.	> Remove the blocking foodstuff.
	The water drainage system is clogged with dirt.	> Remove any dirt from the drain opening and the drain pipe.
Water leaks onto the floor.	The water drain hose is damaged.	> Check the drain water hose for leaks. Repair the hose or replace it if necessary.
	The water drain hose is not routed outside the vehicle.	> Route the hose to the outside of the vehicle (see).
Unusual noises (e.g., loud humming)	A component of the refrigerant circuit cannot move freely (touching the wall).	> Bend the component carefully away from the obstruction.
	A foreign object is located between the cooling unit and the wall.	> Remove the foreign object.

12.1 DC operation

Problem	Possible cause	Suggested remedy
The refrigerator does not work. The display does not light up.	Insulation faults, corrosion, breaks or loose connections between the battery and electronics unit.	> Check connections and live cables for insulation faults, corrosion, breaks or loose connections.

Problem	Possible cause	Suggested remedy
	Main switch defective (if installed).	> Replace the main switch.
	Internal fuse has blown.	> Replace the internal fuse.
	The vehicle fuse has blown.	> Replace the vehicle fuse. > Refer to the operating manual of your vehicle.
	The ignition is not switched on.	> Switch on the ignition.
	The vehicle battery is discharged.	> Charge the vehicle battery.
	Internal error or defective components.	> Contact an authorized service agent.
The refrigerator does not cool.	The battery capacity is too low.	> Replace or charge the battery.
	The refrigerator is not connected correctly.	> Check the connections (see) > Check the cable cross-sections and lengths (see).

12.2 AC operation

Problem	Possible cause	Suggested remedy
The refrigerator does not work. The display does not light up.	The vehicle is not connected to the AC power supply.	> Connect the vehicle to the AC power supply.
	Main switch defective (if installed).	> Replace the main switch.
	Internal fuse has blown.	> Replace the internal fuse.
	The fuse in the AC cable is defective.	> Contact an authorized service agent.
	The integrated mains adapter is defective.	> Contact an authorized service agent.
	Internal error or defective components.	> Contact an authorized service agent.

12.3 Faults and beeps

All faults are indicated on the display by highlighting the middle submenu on the main menu with a red banner and a code (error screen, see **B** in Standby mode and error screen on page 14).

Faults that end the entire cooling function are additionally indicated by a beep. The beep will last for 2 min and repeat every 30 min until the fault is cleared.

If several faults occur, the display shows the last fault that occurred. After the fault has been cleared, next faults are displayed.

Problem	Suggested remedy
-	> Press the control knob for 2 s … 4 s to reset a fault. > Press the 🔇 button in the settings menu (see) to mute the beep.

WARNING type fault messages

All faults of the WARNING type are reset automatically once the fault has been rectified.

Error message	Fault	Solution
01	Defrost NTC sensor error	Replace the defrost NTC sensor.
02	Refrigerator air NTC sensor error	Replace the refrigerator air NTC sensor.
10 + icon flashing and a beep	The refrigerator door is opened for more than 2 min.	Close the refrigerator door.
11	For 12 V⎓ / 24 V⎓ input, DC under-voltage (< 7.5 V⎓) or over-voltage (> 31.5 V⎓)	Check the DC supply voltage.
	For 48 V⎓ input, DC under-voltage (< 31.7 V⎓) or over-voltage (> 62.3 V⎓)	
14	Internal fan defective	Contact an authorized service agent.
	Cooling operation is continued with a fixed thermostat setting.	
17	Low current at the defrost heater (< 1 A)	• Switch the refrigerator off and on again. • Contact an authorized service agent if this error occurs again.
19	For 12 V⎓ / 24 V⎓ input, the input voltage outside the ABS setting range	• Charge the vehicle battery. • Switch on the ignition.
	For 48 V⎓ input, DC under-voltage (< 34 V⎓) or over-voltage (> 60 V⎓)	
26	Ambient thermostat sensor error	• Switch the refrigerator off and on again. • Contact an authorized service agent if this error occurs again.

ERROR type fault messages

Problem	Suggested remedy
-	All faults of the ERROR type must be reset manually: > Press and hold the control knob for 2 s … 4 s. ✓ The error has been reset.

Error message	Fault	Solution
03	No communication between power module and display; operation is continued with the last saved settings	Contact an authorized service agent.
18	Over current protection of the defrost heater; defrost heater is turned off	• Reset the error • Contact an authorized service agent if this error occurs again.

Error message	Fault	Solution
32 + a beep	Over current protection of the outer fan	• Reset the error • Contact an authorized service agent if this error occurs again.
33 + a beep	Compressor does not start.	• Reset the error • Contact an authorized service agent if this error occurs again.
34 + a beep	Compressor is overloaded.	• Reset the error • Contact an authorized service agent if this error occurs again.
35 + a beep	Thermal shutdown of the control unit	• Reset the error • Contact an authorized service agent if this error occurs again.

13 Warranty

If the product does not work as it should, please contact your retailer or the manufacturer's branch in your country (see dometic.com/dealer). The warranty applicable to your product is 1 year(s).

For repair and warranty processing, please include the following documents when you send in the device:

- A copy of the receipt with purchasing date
- A reason for the claim or description of the fault

Note that self-repair or nonprofessional repair can have safety consequences and might void the warranty.

Australia only

Our goods come with guarantees that cannot be excluded under the Australian Consumer Law. You are entitled to a replacement or refund for a major failure and for compensation for any other reasonably foreseeable loss or damage. You are also entitled to have the goods repaired or replaced if the goods fail to be of acceptable quality and the failure does not amount to a major failure. The benefits provided to you as the consumer by this warranty are in addition to other rights and remedies available to you under the law.

New Zealand only

This warranty policy is subject to the conditions and guarantees which are mandatory as implied by the Consumer Guarantees Act 1993(NZ).

Local support

Please find local support at the following link address: dometic.com/dealer

14 Disposal

WARNING! Fire hazard

> The refrigerant used is highly flammable. Do not open or damage the refrigerant circuit.

> The insulation of the device contains flammable cyclopentane (see data plate). Do not damage the insulation.

Place the packaging material in the appropriate recycling waste bins wherever possible. This separation is necessary, as packaging is valuable resource and improper disposal may impact human health and the environment. Consult a local recycling center or specialist dealer for details about how to dispose of the product in accordance with the applicable disposal regulations.

15 Technical data

This product contains fluorinated greenhouse gases.

The cooling unit is hermetically sealed.

	RUC5307X	RUC6507X	RUC8507X
Connection voltage		48 V⎓	
House battery protection (low voltage)			
• End-of-discharge voltage		34 V	
• Cut-in voltage		35 V	
House battery protection (high voltage)			
• End-of-discharge voltage		60 V	
• Cut-in voltage		59.5 V	
Power consumption		65 W	
Rated current		1.6 A	

	RUC5308X	RUC6508X	RUC8508X
Connection voltage		100 V∼ … 240 V∼, 50 / 60 Hz	
		12 V⎓ / 24 V⎓	
House battery protection (12 V)			
• End-of-discharge voltage		10.4 V	
• Cut-in voltage		11.7 V	
House battery protection (24 V)			
• End-of-discharge voltage		22.8 V	
• Cut-in voltage		24.2 V	
Power consumption		88 W	
Rated current			
• 100 V∼		0.95 A	
• 240 V∼		0.4 A	
• 12 V⎓		7.3 A	
• 24 V⎓		3.65 A	

	RUC5307X, RUC5308X	RUC6507X, RUC6508X	RUC8507X, RUC8508X
Capacity			
• Refrigerator compartment	132 L	134 L	170 L

	RUC5307X, RUC5308X	RUC6507X, RUC6508X	RUC8507X, RUC8508X
• Frozen compartment	13 L	46 L	46 L
• Total capacity	145 L	180 L	216 L
Refrigerant		R600a	
Refrigerant quantity	19 g	30 g	31 g
Cooling temperature range			
• Refrigerator compartment	0°C … 8°C	0°C … 8°C	0°C … 8°C
• Frozen compartment	– 20°C … – 10°C	– 20°C … – 10°C	– 17°C … – 10°C
Climate class		T	
Intended ambient temperature for use		16°C … 43°C	
Noise emission		< 45 dB(A)	
Dimensions H*W			
• With flange	1195 mm × 550 mm	1451 mm × 550 mm	1661 mm × 550 mm
• Without flange	1181 mm × 525 mm	1438 mm × 525 mm	1648 mm × 525 mm
• Depth (overall, excluding control knob with 5 mm)	667 mm	667 mm	667 mm
• Depth (from flange rear face)	611 mm	611 mm	611 mm
Weight	42 kg	47 kg	51 kg
Maximum load			
• Per upper door rack		3 kg	
• Per bottom door rack		4.5 kg	
• Per door		10.5 kg	
Inspection/Certification			

DOMETIC

4445104286 4472003470 541073-MAW40A03 REV05 2026-10-16

dometic.com

YOUR LOCAL DEALER

dometic.com/dealer

YOUR LOCAL SUPPORT

dometic.com/contact

YOUR LOCAL SALES OFFICE

dometic.com/sales-offices

A complete list of Dometic companies, which comprise the Dometic Group, can be found in the public filings of:
DOMETIC GROUP AB • Hemvärnsgatan 15 • SE-17154 Solna • Sweden